LONG SEAMS	
COURSE	ORIENTATION
1(TOP)	0°
2	10°

*VERT – TOP TO BOTTOM

Ship loose items:
(4 PCS.) PIPE SUPPORT LEGS
(4 PCS.) LEG BASE PLATE

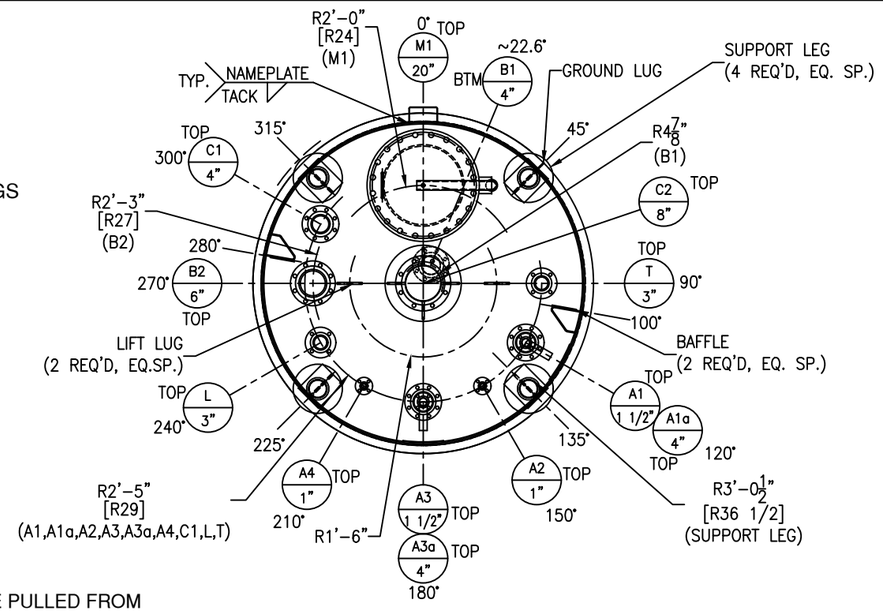

*NOTE: ALL ELEVATIONS ARE PULLED FROM WELD SEAM FOR EASE OF FABRICATION

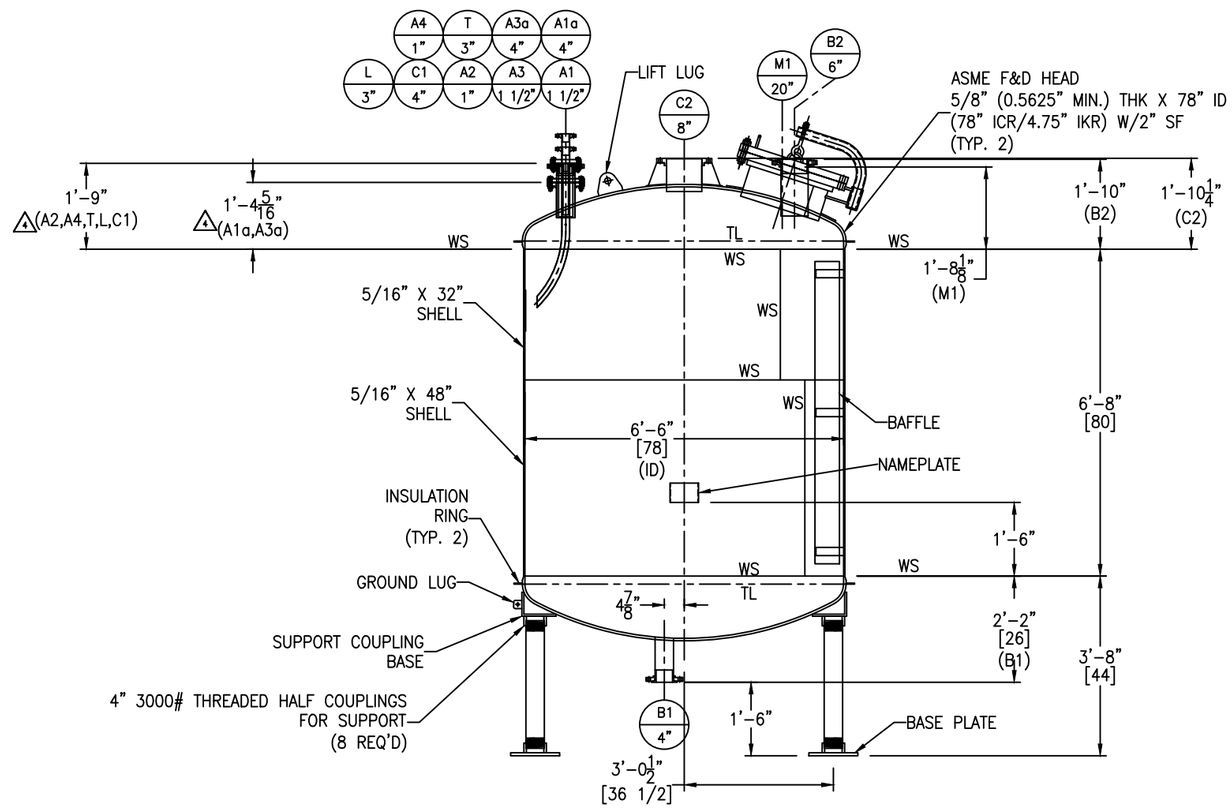

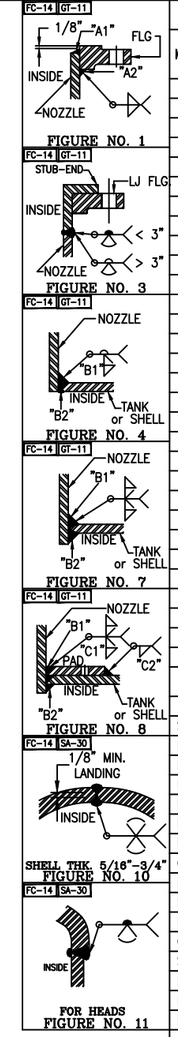

NOZZLE SCHEDULE

MARK	SERVICE	SIZE	RATING	TYPE / STYLE	NECK SCHED.	PROJECTION EXT. (℄)	PROJECTION INT. (MIN.)	WELD FIGURE	REPAD SIZE (WIDTH X THK.)	WELD SIZE "A1"	"A2"	"B1"	"B2"	"C1"	"C2"
A1a	BASE NOZZLE FOR A1	4"	150#	RFSO W/BLIND	40S	SEE DWG	1"	1,7	–	1/4	3/8	1/4	1/8	–	–
A1	–	1 1/2"	150#	LJSE W/ELBOW	40S	SEE DWG	SEE DWG	3,7	–	–	–	1/4	1/8	–	–
A2	–	1"	150#	LJSE	40S	SEE DWG	1"	3,7	–	–	–	3/16	1/8	–	–
A3a	BASE NOZZLE FOR A3	4"	150#	RFSO W/BLIND	40S	SEE DWG	1"	1,7	–	1/4	3/8	1/4	1/8	–	–
A3	–	1 1/2"	150#	LJSE W/ELBOW	40S	SEE DWG	SEE DWG	3,7	–	–	–	1/4	1/8	–	–
A4	–	1"	150#	LJSE	40S	SEE DWG	1"	3,7	–	–	–	3/16	1/8	–	–
L	–	3"	150#	LJSE W/BLIND	40S	SEE DWG	1"	3,7	–	–	–	1/4	1/8	–	–
B1	–	4"	150#	LJSE	40S	SEE DWG	–	3,4	–	–	–	1/4	1/8	–	–
B2	–	6"	150#	LJSE	40S	SEE DWG	1"	3,7	–	–	–	5/16	1/8	–	–
C1	–	4"	150#	LJSE	40S	SEE DWG	1"	3,7	–	–	–	1/4	1/8	–	–
C2	AGITATOR	8"	150#	RFSO	40S	SEE DWG	1"	1,8	5" X 3/16"	1/4	1/2	3/16	3/16	3/16	3/16
T	–	3"	150#	LJSE W/BLIND	40S	SEE DWG	1"	3,7	–	–	–	1/4	1/8	–	–
M1	MANWAY	20"	150#	RFSO W/DAVIT	1/2"	SEE DWG	1"	1,8	4" X 3/8"	1/4	3/4	3/8	1/8	3/8	3/8

MATERIALS OF CONSTRUCTION

	VESSEL
SHELL	SA240-316/316L
HEADS	SA240-316/316L
RIM ANGLE	–
NOZZLE NECKS	SA312-316/316L WLD & SA403-316/316L WPB
NOZZLE FLANGES	SA182F-316/316L
MANWAY NECKS	SA240-316/316L
MANWAY FLANGES	SA182F-316/316L
GASKETS	GARLOCK 3510
BOLTS/STUDS	SA193-B7 (ZINC PLATED)
NUTS	SA194-2H (ZINC PLATED)
REPADS/WEAR PADS	SA240-316/316L
COUPLINGS	SA182F-316/316L
SUPPORTS/HOLD DOWNS	SA312-316/316L WLD & SA240-316/316L
LIFTING LUGS	SA240-316/316L
INTERNAL SUPPORTS	SA240-316/316L
INSULATION RINGS	SA240-316/316L
GROUND LUG	SA240-316/316L
BAFFLE	SA240-316/316L
SUPPORT COUPLING BASE	SA240-316/316L
DAVIT ARM ASSEMBLY	SA240-304/304L & SA312-304/304L WLD
HANDRAIL	–
HANDRAIL CLIPS	–
PLATFORM	–
PLATFORM CLIPS	–
DIPTUBE SUPPORT	–
JACKET SHELL	–
JACKET HEADS	–
JACKET NOZZLE NECKS	–
JACKET NOZZLE FLANGES	–

DESIGN DATA

	VESSEL
DESIGN AND FAB. CODE	ASME
CERT. STAMP REQ'D.	YES
DESIGN PRESSURE	100 PSIG/FV
DESIGN TEMPERATURE	450° F
MIN. DESIGN METAL TEMP.	-20° F @ 100 PSIG
OPERATING PRESSURE	10 INH20
OPERATING TEMPERATURE	150° F
JOINT EFFICIENCY HEADS	0.70
JOINT EFFICIENCY SHELL	0.70
CORROSION ALLOWANCE	0"
SPECIFIC GRAVITY	1.02
EARTHQUAKE ZONE	Ss = (0.314) S1 = (0.150)
WIND LOAD	105 MPH
STRESS RELIEF	NOT REQ'D
RADIOGRAPHIC EXAM	NOT REQ'D
DYE PENETRANT EXAM	NOT REQ'D
MAGNETIC PARTICLE EXAM	NOT REQ'D
HYDROSTATIC TEST	NOT REQ'D
PNEUMATIC TEST	118 PSIG / GAUGE #9
JKT DESIGN AND FAB. CODE	–
JKT CERT. STAMP REQ'D.	–
JKT DESIGN PRESSURE	–
JKT DESIGN TEMPERATURE	–
JKT MIN. DESIGN METAL TEMP.	–
JKT OPERATING PRESSURE	–
JKT OPERATING TEMPERATURE	–
JKT JOINT EFFICIENCY HEADS	–
JKT JOINT EFFICIENCY SHELL	–
JKT HYDRO TEST	–

VESSEL FINISH

INTERIOR WELD TREATMENT:	SAV TANK STANDARD
EXTERIOR WELD TREATMENT:	SAV TANK STANDARD
SAV TANK FINISHING STANDARD:	SEE NOTE 6
INSULATION:	2" BY OTHERS
PAINTING:	N/A

VESSEL CAPACITY AND WEIGHTS

OPERATING CAPACITY	1,650 GAL.
FULL CAPACITY	1,950 GAL.
EMPTY SHIPPING WEIGHT	6,000 LBS.
WEIGHT FULL OF WATER	22,600 LBS.
WEIGHT FULL OF PRODUCT	22,900 LBS.

ASME SECT. VIII, DIV. 1
2023 EDITION

ENG. _____ DATE: _____
Q.C. _____ DATE: _____
A.I. _____ DATE: _____

This drawing is issued for customer approval. please review, make approval changes (if any) in red. check the appropriate box, sign & date.

- ☐ Approval – no changes. Please proceed with fabrication.
- ☐ Approved as noted. Please proceed with fabrication
- ☐ Not approved. Please make changes and resubmit.

Customer signature _____ Date _____

GENERAL NOTES

1.) COVER ALL FLANGES, OPENINGS & MACHINED SURFACES PRIOR TO SHIPMENT UNLESS OTHERWISE NOTED.
2.) BOLT HOLES TO STRADDLE 0° & 180° UNLESS OTHERWISE NOTED.
3.) REPADS TO HAVE (1) ø1/4" NPT TELL-TALE HOLES FOR PNEUMATIC TESTING AT 2 PSIG FOR PRESSURE RETAINING PARTS. ALL OTHER REPADS TO HAVE (1) ø1/4" WEEP HOLE AT LOWEST POINT ON PAD.
4.) ASME CODE VESSELS TO BE IN ACCORDANCE WITH UG-80 & UG-81. TOLERANCES: +/- 1/8" FOR DIMENSIONS AND +/- 2 DEGREES FOR ORIENTATIONS.
5.) ASME MATERIALS TO CONFORM TO THE FOLLOWING: FLANGES – B16.5, FITTINGS – B16.9 & COUPLINGS – B16.11.
6.) PICKLE ALL EXTERIOR WELDS. PASSIVATE INTERIOR & EXTERIOR OF VESSEL.

REVISIONS

REV	D.BY	C.BY	DATE	DESCRIPTION
				AS BUILT
4	RS	NP	4/3/25	CERTIFIED REV 1
3	RS	NP	4/3/25	CERTIFIED
2	AD	RS	3/25/25	APPROVAL REV 2
1	AD	RS	2/28/25	APPROVAL REV 1
0	AD	RS	2/11/25	APPROVAL

Savannah Tank & Equipment Corp.
1517 Telfair Road, Savannah, GA 31415
(912) 233-8902

DRAWN BY: AD
CHK'D BY: RS
APPROVED BY: NP
SCALE: 1/2" = 1'-0"

CYTEC INDUSTRIES INC
P-50 REPLACEMENT TANK
EQUIP. #
CUST. PO #4505134262

DRAWING NO.: 005-25-1 SHT 1 OF 4 REV. SET 4

FC-14

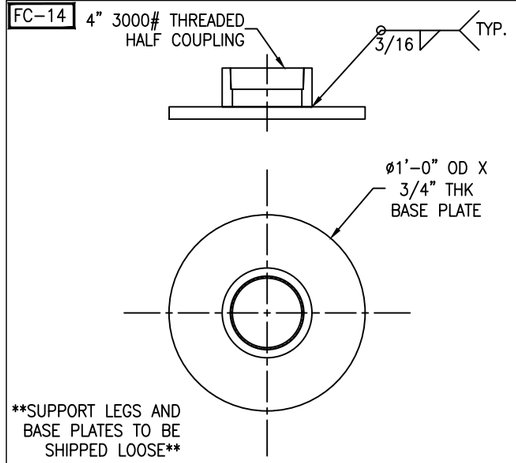

BASE PLATE DETAIL

(4 REQ'D) SCALE: 2" = 1'-0"

FC-14

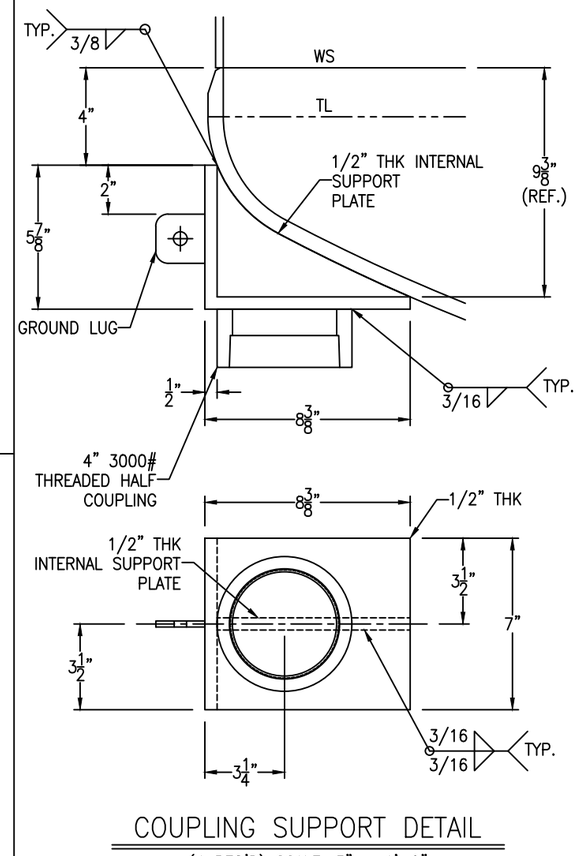

COUPLING SUPPORT DETAIL

(4 REQ'D) SCALE: 3" = 1'-0"

FC-14

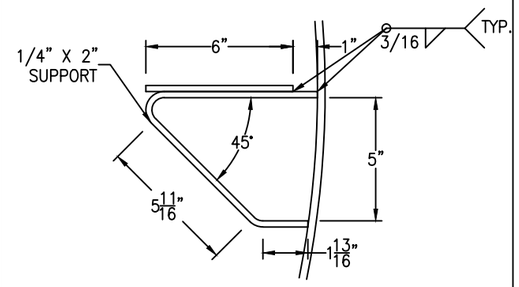

BAFFLE SUPPORT DETAIL

(6 REQ'D) SCALE: 3" = 1'-0"

FC-14

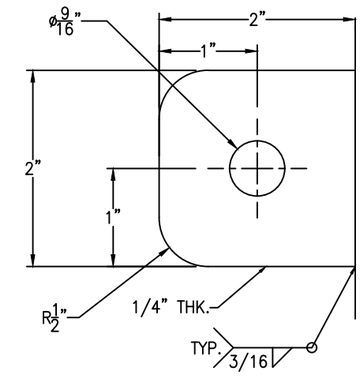

GROUND LUG IS LOCATED @ 45°

GROUND LUG DETAIL

(1 REQ'D) SCALE: 1'-0" = 1'-0"

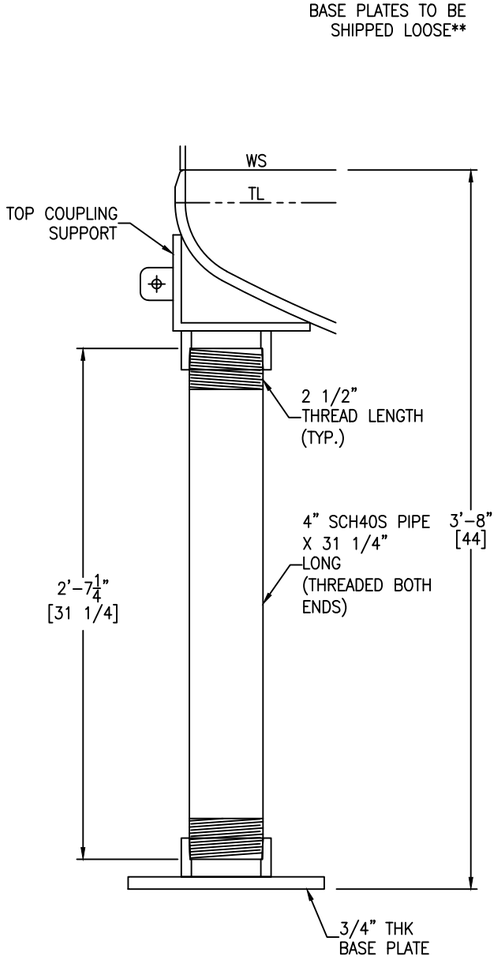

SUPPORT LEG DETAIL

(4 REQ'D) SCALE: 2" = 1'-0"

FC-14

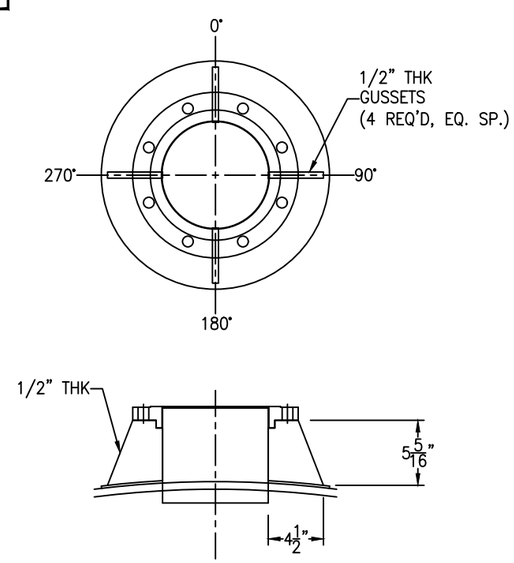

NOZZLE C2 GUSSET DETAIL

SCALE: 1 1/2" = 1'-0"

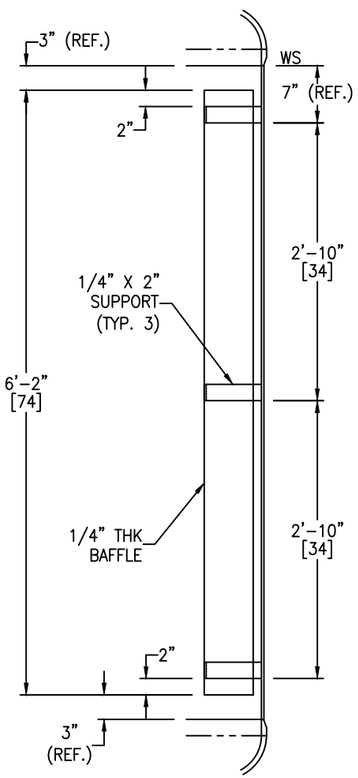

BAFFLE DETAIL

(2 REQ'D) SCALE: 1" = 1'-0"

FC-14

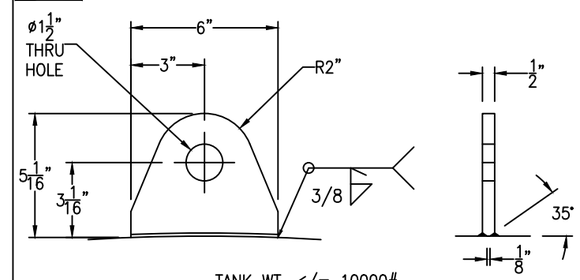

TANK WT. <= 10000#
SHACKLE PIN DIA. = 1"

LIFT LUG DETAIL

(2 REQ'D) SCALE: 3" = 1'-0"

Bolting for blinds
L & T: (4+4) 5/8"-11 NC x 3" HH BOLT
(4+4) 5/8"-11 NC HH NUT
(1+1) 3" 150# RING GASKET X 1/8" THK
A1a & A3a: (8+8) 5/8"-11 NC x 3" HH BOLT
(8+8) 5/8"-11 NC HH NUT
(1+1) 4" 150# RING GASKET X 1/8" THK

REV	D.BY	C.BY	DATE	DESCRIPTION
				AS BUILT
4	RS	NP	4/3/25	CERTIFIED REV 1
3	RS	NP	4/3/25	CERTIFIED
2	AD	RS	3/25/25	APPROVAL REV 2
1	AD	RS	2/28/25	APPROVAL REV 1
0	AD	RS	2/11/25	APPROVAL

1 REVISIONS

Savannah Tank & Equipment Corp.
1517 Telfair Road, Savannah, GA 31415
(912) 233-8902

DRAWN BY: AD
CHK'D BY: RS
APPROVED BY: NP
SCALE: 1/2" = 1'-0"

CYTEC INDUSTRIES INC
P-50 REPLACEMENT TANK
EQUIP. #
CUST. PO #4505134262

DRAWING NO.: 005-25-2 SHT 2 OF 4 REV. SET 4

FC-14

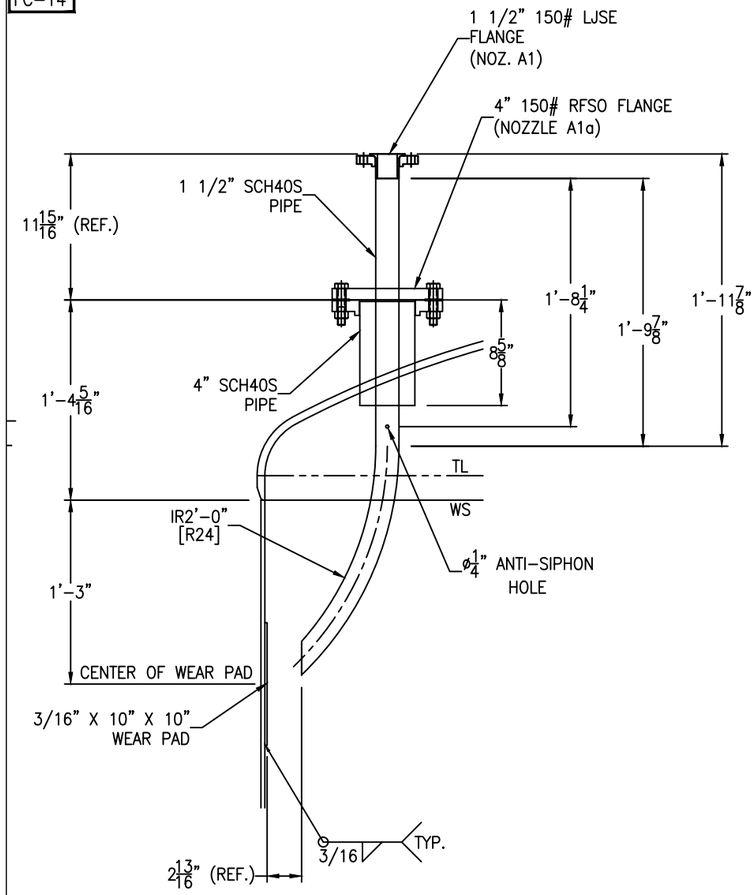

⚠NOZZLE A1a & A1 DETAIL

SCALE: 1 1/2" = 1'-0"

FC-14

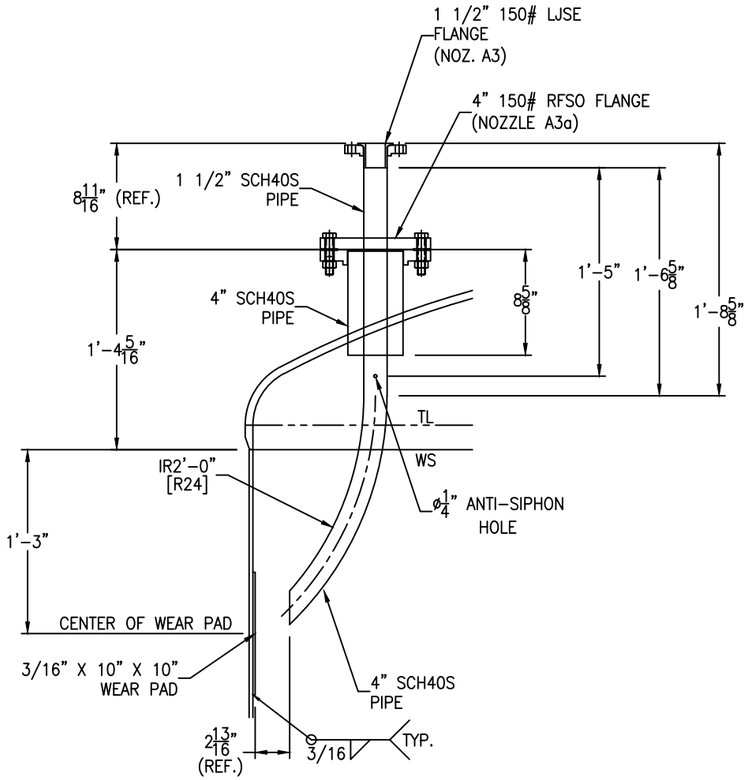

⚠NOZZLE A3a & A3 DETAIL

SCALE: 1 1/2" = 1'-0"

FC-14

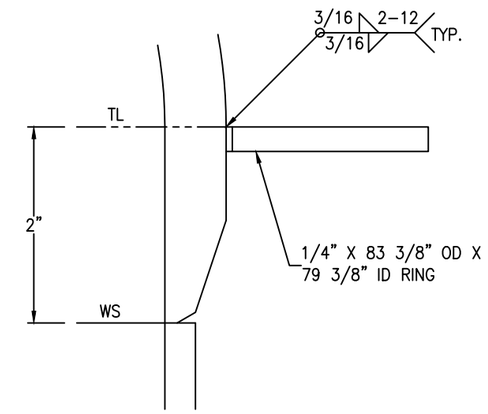

TOP INSULATION RING DETAIL

SCALE: 1'-0" = 1'-0"

FC-14

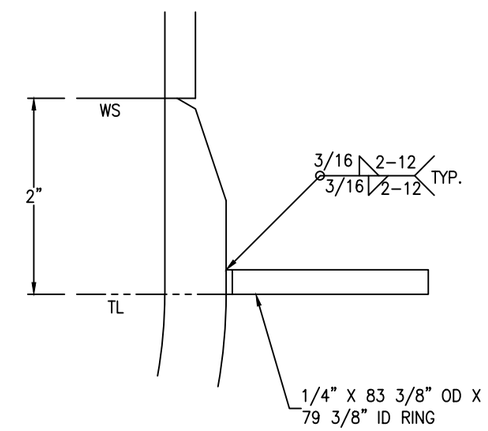

BOTTOM INSULATION RING DETAIL

SCALE: 1'-0" = 1'-0"

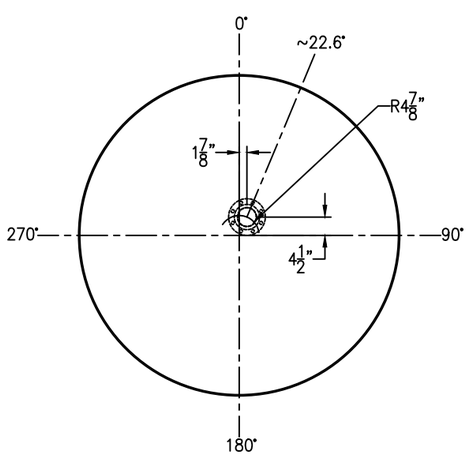

NOZZLE B1 ORIENTATION DETAIL

SCALE: 1/2" = 1'-0"

REV	D.BY	C.BY	DATE	DESCRIPTION
				AS BUILT
4	RS	NP	4/3/25	CERTIFIED REV 1
3	RS	NP	4/3/25	CERTIFIED
2	AD	RS	3/25/25	APPROVAL REV 2
1	AD	RS	2/28/25	APPROVAL REV 1
0	AD	RS	2/11/25	APPROVAL

⚠ REVISIONS

Savannah Tank & Equipment Corp.
1517 Telfair Road, Savannah, GA 31415
(912) 233-8902

DRAWN BY: AD
CHK'D BY: RS
APPROVED BY: NP
SCALE: 1/2" = 1'-0"

CYTEC INDUSTRIES INC
P-50 REPLACEMENT TANK
EQUIP. #
CUST. PO #4505134262

DRAWING NO.: 005-25-3 SHT 3 OF 4 REV. SET 4

FC-14

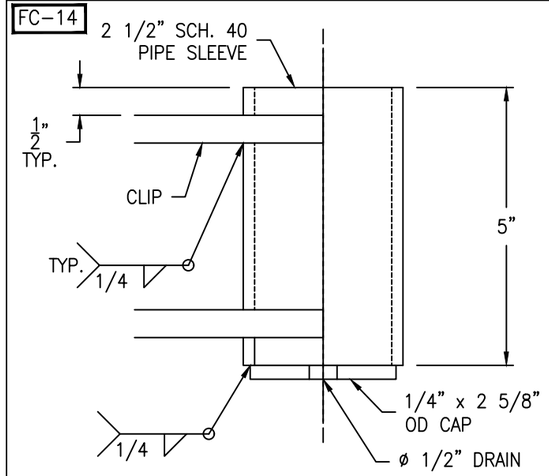

SLEEVE DETAIL

(1 REQ'D) SCALE: 6" = 1'-0"

FC-14

Bolting for blind
(20) 1 1/8-7 NC x 6 1/2" FULL THREADED STUD
(40) 1 1/8-7 NC HH NUT
(1) 20" 150# RING GASKET x 1/8"

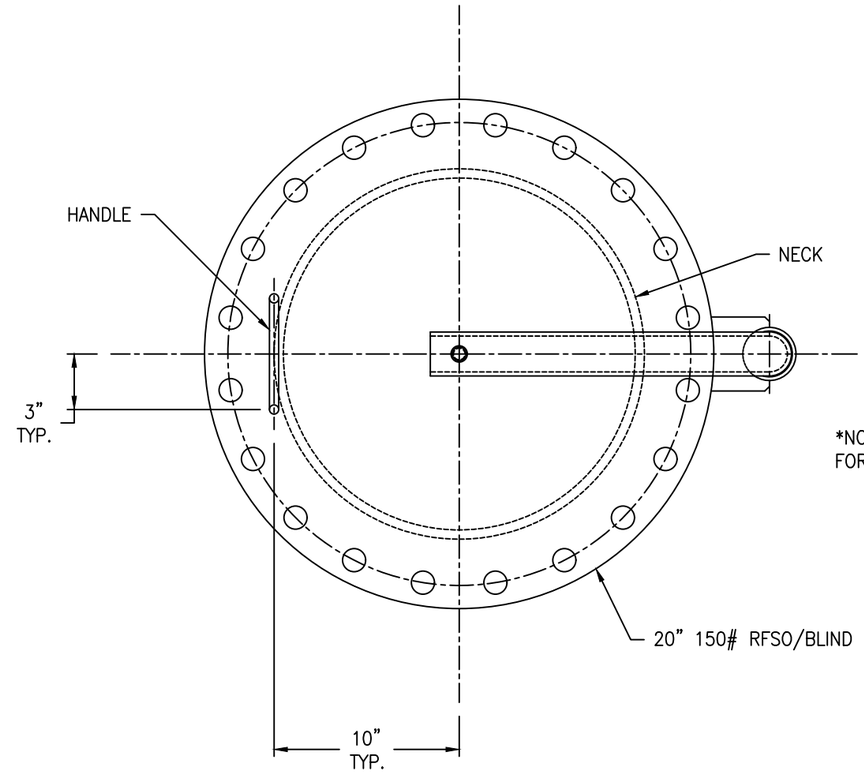

*NOTE: SEE VESSEL ORIENTATION FOR DAVIT LOCATION

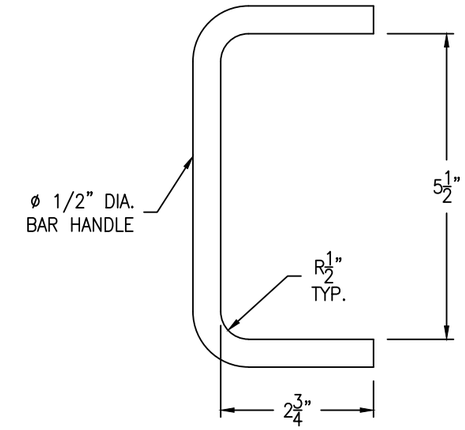

HANDLE DETAIL

(1 REQ'D) SCALE: 6" = 1'-0"

FC-14

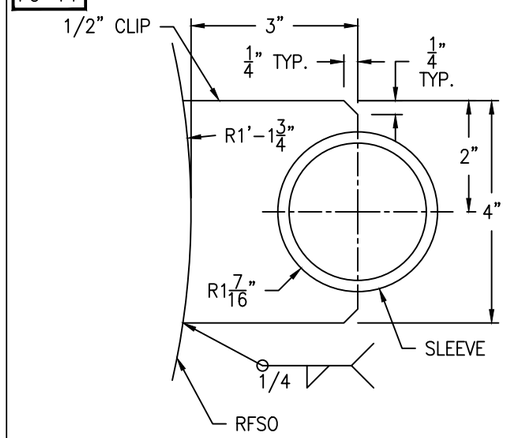

UPPER CLIP DETAIL

(1 REQ'D) SCALE: 6" = 1'-0"

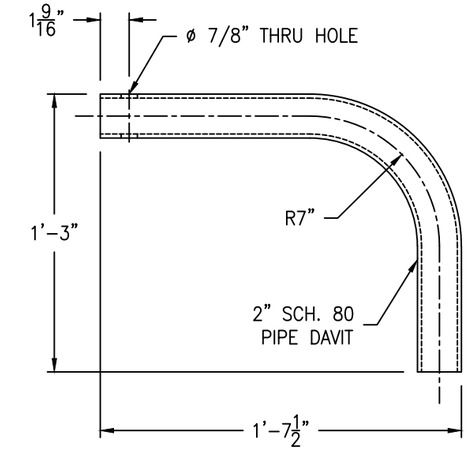

DAVIT ARM DETAIL

(1 REQ'D) SCALE: 2" = 1'-0"

FC-14

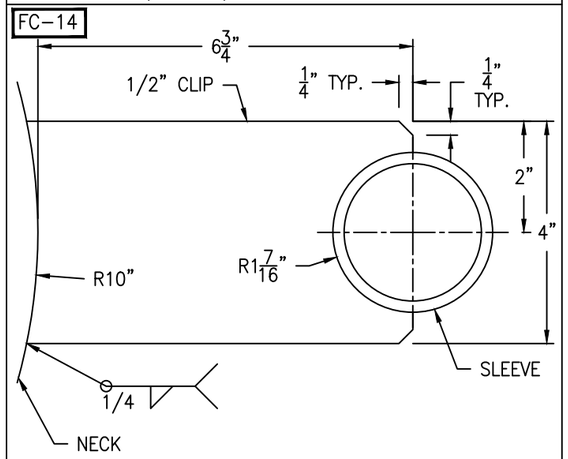

LOWER CLIP DETAIL

(1 REQ'D) SCALE: 6" = 1'-0"

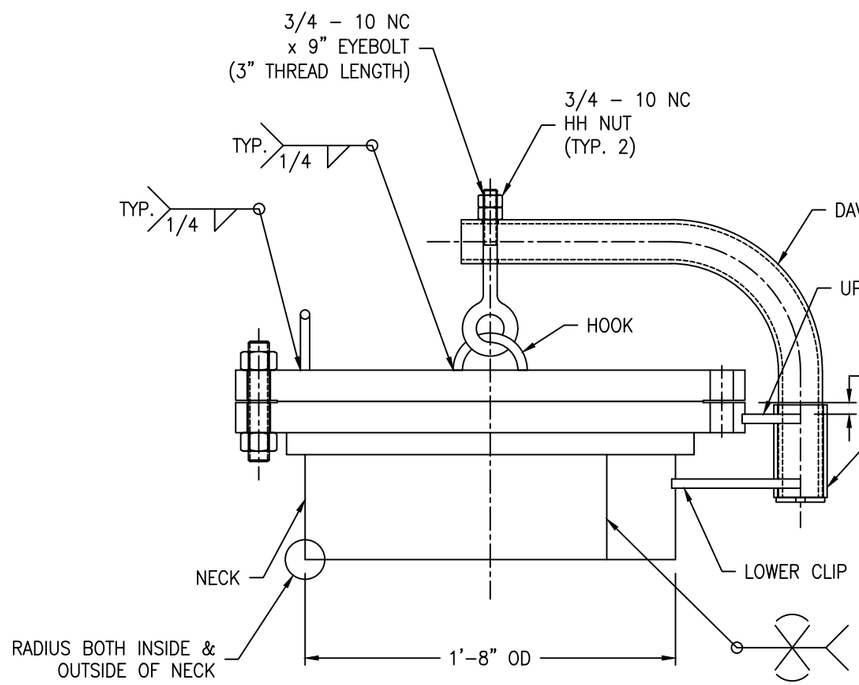

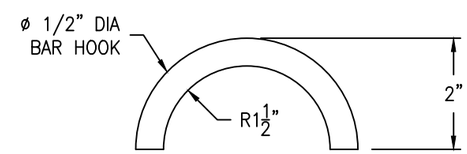

HOOK DETAIL

(1 REQ'D) SCALE: 6" = 1'-0"

REV	D.BY	C.BY	DATE	DESCRIPTION
				AS BUILT
4	RS	NP	4/3/25	CERTIFIED REV 1
3	RS	NP	4/3/25	CERTIFIED
2	AD	RS	3/25/25	APPROVAL REV 2
1	AD	RS	2/28/25	APPROVAL REV 1
0	AD	RS	2/11/25	APPROVAL

1 REVISIONS

Savannah Tank & Equipment Corp.
1517 Telfair Road, Savannah, GA 31415
(912) 233-8902

DRAWN BY: AD
CHK'D BY: RS
APPROVED BY: NP
SCALE: 2" = 1'-0"

CYTEC INDUSTRIES INC
P-50 REPLACEMENT TANK
EQUIP. #
CUST. PO #4505134262

DRAWING NO.: 005-25-4 SHT 4 OF 4 REV. SET 4